EPJ Web of Conferences **109**, 09002 (2016)
DOI: 10.1051/epjconf/201610909002

Underground nuclear astrophysics studies with CASPAR

Daniel Robertson[1a], Manoel Couder[1], Uwe Greife[2], Frank Strieder[3] and Michael Wiescher[1]

[1]*Department of Physics, University of Notre Dame, Notre Dame, IN, 46556, USA*
[2]*Department of Physics, Colorado School of Mines, Golden, CO, 80401, USA*
[3]*Department of Physics, South Dakota School of Mines and Technology, Rapid City, SD, 57701, USA*

Abstract. The drive of low-energy nuclear astrophysics laboratories is to study the reactions of importance to stellar burning processes and elemental production through stellar nucleosynthesis, over the energy range of astrophysical interest. As laboratory measurements approach the stellar burning window, the rapid drop off of cross-sections is a significant barrier and drives the need to lower background interference. The natural background suppression of underground accelerator facilities enables the extension of current experimental data to lower energies. An example of such reactions of interest are those thought to be sources of neutrons for the s-process, the major production mechanism for elements above the iron peak. The reactions $^{13}C(\alpha,n)^{16}O$ and $^{22}Ne(\alpha,n)^{25}Mg$ are the proposed initial focus of the new nuclear astrophysics accelerator laboratory (CASPAR) currently under construction at the Sanford Underground Research Facility, Lead, South Dakota

1 Introduction

A new underground accelerator laboratory for studying low energy nuclear reaction cross sections of relevance for nuclear astrophysics, is currently under construction. The Compact Accelerator System for Performing Astrophysical Research (CASPAR), is at present in the installation phase at the Sanford Underground Research Facility (SURF), in Lead, South Dakota. The main focus of this new system, is on the measurements of the stellar neutron sources that dictate the production of heavy elements through the weak and the main s-process in stars. This is a long-standing, potentially transformational question of relevance for the understanding of the chemical evolution of our Universe in early stars and also later star generations [1]. It is also crucial for the definition and interpretation of the solar r-process abundance curve [2] that is defined as the key signature and guiding principle for r-process measurements at present and future radioactive beam facilities [3].

The CASPAR laboratory is currently aligned towards the measurement of (α,n) reactions of relevance for the production of neutrons in core helium burning of massive Red Giant stars (weak s-process) [4] and shell or inter-shell helium burning of low mass AGB stars [5]. CASPAR is a complementary system to that of the European LUNA facility at the INFN Gran Sasso Laboratory in Italy, which is primarily focused on the study of critical reactions in stellar hydrogen burning [6]. The energy range of CASPAR is considerably wider than that of LUNA, which is limited to energies below 400 keV. It is therefore most suited for the Gamow window of helium burning that ranges

[a] Corresponding author: drobert4@nd.edu

approximately from 100 keV to 800 keV depending on the specific reaction. Most significantly, this overlaps with the energy range of the University of Notre Dame, NSL facility (>500 keV) and the LUNA facility (<400 keV). This greatly expands available reaction study measurements towards a broader energy range.

Development and implementation of the CASPAR system is being undertaken by a small consortium of universities; South Dakota School of Mines and Technology (SDSMT), The University of Notre Dame (ND) and Colorado School of Mines (CSM), but will serve as an open access facility for the broader nuclear astrophysics community.

2 Experimental facility and equipment

2.1 Accelerator

The CASPAR system includes a 1 MV model JN electrostatic Van de Graff accelerator originally produced by High Voltage Engineering. All acceleration components are encase in a 19 mm thick steel pressure vessel, with a N_2-CO_2 gas mixture in a 4:1 ratio, at 15 bar. Accelerator terminal charging is achieved through charge carrying belt, providing positive charge for the terminal and 400 Hz power for the terminal components, through two 150 W alternator assemblies.

A gas fed radio-frequency ion source at the terminal is able to generate both proton and helium beam in anticipated quantities ~ 300μA. A reduction in beam delivery is anticipated due to mechanical constraints. Originally built in 1958 as an injector for the Chalk River Tandem accelerator, the CASPAR accelerator has been operating for 10 years at the University of Notre Dame NSL as part of the low-energy nuclear astrophysics program.

Prior to installation, the CASPAR accelerator has been refurbished and upgraded at the NSL. The addition of a modern fibre optic control and communication system inside the pressure vessel and encapsulation of vital components, will provide the higher level of reliability required for operation in a remote location.

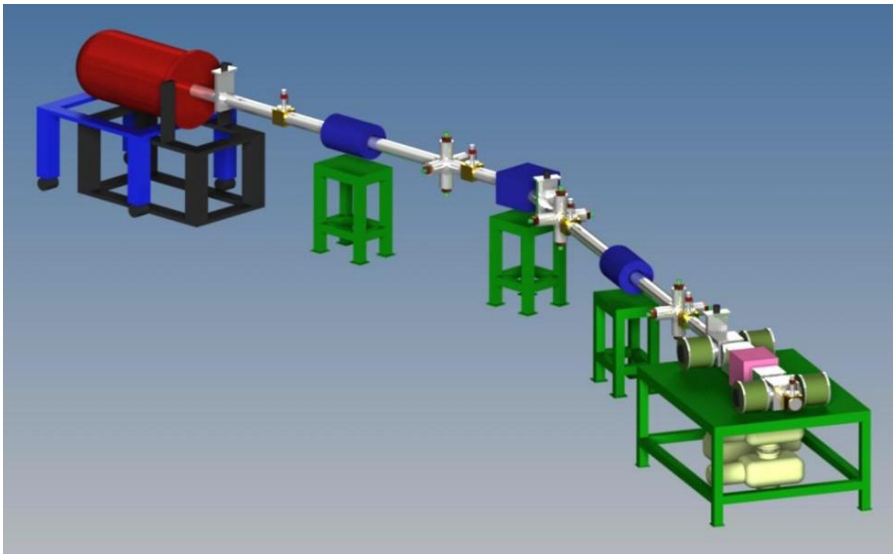

Figure 1. CASPAR conceptual design. Shown from left to right are; 1 MV accelerator, magnetic focusing and selection elements and recirculating extended gas target.

Ion beam selection is managed through the use of a 25° analysing magnet (86 cm radius, 19 mm gap and 1 x 10^{-5} stability/h) located approximately half-way between the total ion path of 15 m between accelerator and target station, as depicted in Figure 1.

2.2 Target station

Critical requirements for low energy experiments with rapidly diminishing cross-sections are high intensity beams and target systems capable of withstanding the currents without significant deterioration. Target stability under intense ion bombardment and extended duration is a major impediment to low energy nuclear astrophysics, especially in experiments requiring enriched material. Two target stations have been developed for the CASPAR experimental campaigns, a solid beam stop target system and a transmission gas target system.

2.1.1 Solid beam stop target

Beam stop target experiments using thin layers of material deposited or implanted in a solid backing are the backbone of nuclear astrophysics experiments. Target deterioration is a particularly serious problem when using high α intensity beams as required for α-induced reaction measurements. New target bonding methods have been developed and tested at the NSL, maximising target heat conduction while maintaining the use of high Z materials. A further concern is possible low Z impurities in the target material that will require careful independent studies of all background reactions prior to each campaign.

2.1.2 Extended gas target

The inclusion of an extended, recirculating gas target system enables the use of isotopically enriched material at higher purity levels than solid target materials, and avoids the problem of beam heating in solid samples, which can lead to instability in deposited layers of target material. The target designed and developed at CSM allows for full re-circulation of enriched target gas, with a cleaning stage and re-compression. The system is designed to insure a maintained vacuum level of better than 1 x 10^{-6} Torr at the target entrance, while creating an extended target in the Torr range of selected target gases.

2.1.3 Detection

The neutrons produced in the different (α,n) reactions in stars have an energy of less than 1 MeV, less than 2.5 MeV for ^{13}C(α,n). The reaction neutrons will be measured with a (nearly) 4π detector consisting of twenty ^{3}He counters embedded in two circular rings in a polyethylene moderator matrix around the target [7]. These detectors have a high counting efficiency of around 50% for low energy neutrons created at the centre of the detector. Detectors of this kind are the NERO detector at MSU [8] and the detector used at Stuttgart for previous ^{22}Ne(α,n) reaction measurements [9]. Extensive tests of the newly developed system at different underground locations demonstrated a negligible internal neutron background from radium impurities in the aluminium ^{3}He cylinder walls. Figure 2 shows a Monte Carlo simulation for a neutron thermalization and detection process. Neutron background measurements at several locations and differing environments were undertaken to study the overall contribution of surrounding rock formations. The internal background in the ^{3}He detection device was negligible and indistinguishable from the noise background level in the detector as demonstrated by measurements in the pure NaCl salt environment at WIPP (Waste Isolation Pilot Plant).

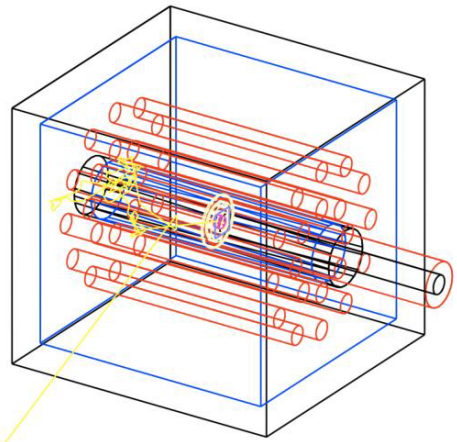

Figure 2. Monte Carlo simulation for a neutron thermalization and detection process in the proposed CASPAR neutron detector.

2.3 Facility

The benefits of moving experiments underground are evident in the reduction of neutron background rates, which can be orders of magnitude. The rock overburden acts as an effective shield from cosmic-ray muons, the main source of background neutrons on the surface. An additional advantage of the suppression of the high-energy muon flux is the raised effectiveness of passive shielding. On the surface the shield itself becomes a neutron source due to the interaction of muons with the material. This component becomes negligible underground.

The remaining neutron flux underground is generally of the order of 10^{-6} neutrons/cm^2/s and consists of low-energy (<10 MeV) neutrons generated by (alpha, n) reactions induced by alpha particles from the decay of uranium- and thorium-chain isotopes in the surrounding rock and by fission neutrons from ^{238}U [10,11].

CASPAR is located at the main science level of the Sanford Underground Research Facility (SURF) in Lead, South Dakota. Figure 3 outlines current and proposed experimental areas at the 4850 ft level of the facility. The rock overburden of 1500 m is an equivalent to 4300 m of water shielding (mwe), and a background muon flux of 0.04 x 10^{-7} /cm^2/s.

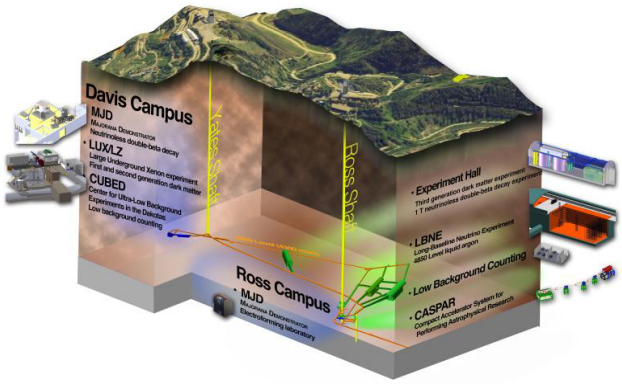

Figure 3. Isometric lay-out of SURF at the 4850 ft level of the Homestake Mine in South Dakota. Image provided by SURF.

An area previously utilized as a mechanics shop at the Ross campus, has been fully renovated into a dedicated accelerator laboratory. The laboratory is comprised of a changing room, control room and accelerator vault, including radiation shielding and monitoring features.

3 Experimental interests

Next to the r-process, the s-process provides the main path for the synthesis of heavy elements beyond iron in our universe. It is characterized by slow neutron capture reactions taking place during different phases of late stellar evolution. The distribution of the heavy element products in these specific burning environments serves as an important signature for the internal hydrodynamic and thermodynamic conditions of the star during its late evolution. This includes the s-process elemental abundances observed in planetary nebulae surrounding low mass AGB stars, or at the surface of deep convective massive stars, while s-process isotopic abundances in meteoritic inclusions serve as an important tool for probing burning conditions in stellar interiors [12].

While the sites of the two s-process components have been determined, the remaining main uncertainty is the actual neutron flux originated at the different sites. Over the last decades two reactions have been identified as the most likely sources, ^{13}C(α,n) and ^{22}Ne(α,n). This does not preclude a number of other sources possibly contributing, such as (α,n) reactions on oxygen and magnesium ions, but based on the present interpretation of the s-process sites, ^{13}C(α,n) and ^{22}Ne(α,n) are dominating as single sources or as complementary sources for neutron production, depending on the actual s-process site.

3.1 ^{13}C(α,n)

The present ^{13}C(α,n) reaction rate has been determined by extrapolation of direct measurements performed at energies higher than 270 keV, far from the Gamow window at 140–230 keV. The most recent direct study of the reaction [13] was based on a low energy study of the reaction above energies of 250 keV including the elastic ^{13}C(α,α) scattering channel. R-matrix techniques were used for extrapolating the data towards the stellar energy range for deriving the reaction rate. The R-matrix fit supported the earlier claim of a subthreshold state at 6.356 MeV in the compound nucleus ^{17}O enhancing the stellar reaction rate as a broad -3 keV sub-threshold resonance tailing into the Gamow-range. The impact of this state was also the topic of an indirect reaction study using the Trojan Horse Method [14]. The data indicated a reaction rate that is 35% higher than initially claimed. This translates already into a substantial difference on the possible contribution of ^{13}C(α,n) to neutron production in the thermal pulsing phase generating a higher production rate for s-process nuclei [15]. A detailed direct investigation of the reaction ^{13}C(α,n) within the Gamow range is necessary to remove uncertainty and put the nuclear aspects of the complex thermodynamic pattern of thermal pulsing on reliable experimental ground.

3.2 ^{22}Ne(α,n)

The present ^{22}Ne(α,n) reaction rate is based on numerous assumptions on the low energy resonance contributions to the reaction [16]. The α threshold in the compound nucleus ^{26}Mg is very high and the states near the threshold are not well defined. Spin values and partial widths of these states are difficult to determine experimentally and impossible to extract theoretically at such a high excitation energy. The level density in ^{26}Mg is high as confirmed by recent ^{25}Mg(n,γ) reactions studies at the n_Tof facility at CERN [17]. However, α capture is determined by only a few natural parity resonances. There have been several attempts to measure this reaction directly, but background neutrons prohibited a reliable measurement at energies below 800 keV. The lowest observed

resonance is at 832 keV (Ex = 11.318 MeV) [18]. The resonance is observed in both the ^{22}Ne(α,n) and ^{22}Ne(α,γ) channel. The resonance strength in both channels suggests a pronounced α cluster configuration. This description also correlates with the observed low single particle configuration. Such cluster configurations may also appear as additional resonances at lower energies adding to the strength of both the ^{22}Ne(α,n) and ^{22}Ne(α,γ) channels. A direct measurement of the reaction to explore the existence of this very strong resonance and its impact on the neutron production and s-process nucleosynthesis in stars is required.

4 Summary

The new underground accelerator facility (CASPAR) currently being installed at the Sanford underground Research Facility, will utilize a 1500 m rock overburden (4300 mwe) to reduce interfering background contributions to the measurement of low-energy cross section measurements of astrophysical interest. This, the first underground accelerator lab in the US will be completed with the installation of a 1 MV electrostatic accelerator, interchangeable target system and associated beam transport and detection equipment. The initial experimental program will focus on (α,n) reactions of interest for the production of neutrons as seed material for the s-process. Initial start-up of this program is anticipated for the summer of 2016.

Acknowledgements

The authors would like to thank the invaluable technical expertise of both the Sanford Underground Research Lab and the Nuclear Science Lab, University of Notre Dame. Acknowledgement and thanks must also be given for the funding of this project by the South Dakota Science and Technology Authority, National Science Foundation (Grant No. PHY1242506) and the University of Notre Dame.

References

[1] M. Wiescher, F. Käppeler, K. Langanke, Ann. Rev. Astr. Astrophys. **50**, 154 (2012)
[2] F. Käppeler, Prog. Part. Nucl. Phys. **43**, 419 (1999)
[3] R. Surman, M. Mumpower, J. Cass, I. Bentley, A. Aprahamian, G. C. McLaughlin, EPJ **66**, 07024 (2014)
[4] M. Pignatari, R. Gallino, M. Heil, M. Wiescher, F. Käppeler, F.; Herwig, S. Bisterzo, Astrophys. J. **710**, 1557 (2010)
[5] F. Käppeler, R. Gallino, S. Bisterzo, W. Aoki, Rev. Mod. Phys. **83**, 157 (2011)
[6] C. Broggini, D. Bemmerer, A. Guglielmetti, R. Menegazzo, Ann. Rev. Nucl. Part. Phys. **60**, 53 (2010)
[7] S. Falahat, A. Best, M. Couder, J. Görres, K.-L. Kratz, U. Ott, E. Stech, M. Wiescher, Nucl. Instr. Meth. **700**, 53 (2013)
[8] J. Pereira, P. Hosmer, G. Lorusso, P. Santi, A. Couture, J. Daly, M. Del Santo, T. Elliot, J. Görres, C. Herlitzius, K.-L. Kratz, L.O. Lamm, H.Y. Lee, F. Montes, M. Ouellette, E. Pellegrini, P. Reeder, H. Schatz, F. Schertz, L. Schnorrenberger, K. Smith, E. Stech, E. Strandberg, C. Ugalde, M. Wiescher, A.Wöhr, Nucl. Instr. Meth. A **618**, 275 (2010)
[9] V. Harms, K.-L. Kratz, M. Wiescher,, Phys. Rev. C **43**, 2849 (1991)
[10] D.-M. Mei, A. Hime, Phys. Rev. D **73**, 053004 (2006)
[11] D.-M. Mei, C. Zhang, A. Hime, Nucl. Instr. Meth. A **606**, 651 (2009)
[12] E. Zinner, Ann. Rev.Earth . Planet. Sci.. 26, 14 (1998)
[13] M. Heil, R. Detwiler, R. E. Azuma, A. Couture, J. Daly, J. Görres, F. Käppeler, R. Reifarth, P. Tischhauser, C. Ugalde, M. Wiescher, Phys. Rev. C **78**, 025803 (2008)

[14] M. La Cognata, C. Spitaleri, O. Tripella, G. G. Kiss, G. V. Rogachev, A. M. Mukhamedzhanov, M. Avila, G. L. Guardo, E. Koshchiy, A. Kuchera, L. Lamia, S. M. R. Puglia, S. Romano, D. Santiago, R. Sparta, Astrophys. J. **777**, 143 (2013)
[15] S. Bisterzo, R. Gallino, F. Käppeler, M. Wiescher, G. Imbriani, O. Straniero, S. Cristallo, J. Görres, R. J. deBoer, Astr. Soc. 449, 506 (2015)
[16] R. Longland, C. Iliadis, Phys. Rev. C **337**, 012047 (2012)
[17] C. Massimi, P. Koehler, S. Bisterzo, N. Colonna, R. Gallino, F. Gunsing, F. Käppeler, G. Lorusso, A. Mengoni, M. Pignatari, and the n_ToF Collaboration, Phys. Rev. C **85**, 044615 (2012)
[18] M. Jaeger, R. Kunz, A. Mayer, J.W. Hammer, G. Staudt, K. L. Kratz, and B. Pfeiffer, Phys. Rev. Lett. **87**, 202501 (2001)