EPJ Web of Conferences **114**, 02008 (2016)
DOI: 10.1051/epjconf/201611402008

Simulation of dynamics of hydraulic system with proportional control valve

Adam Bureček[1], Lumír Hružík[1] and Martin Vašina[1,a]

[1]VŠB-Technical University of Ostrava, Faculty of Mechanical Engineering, Department of Hydromechanics and Hydraulic Equipment, 708 33 Ostrava, Czech Republic

Abstract. Dynamics of a hydraulic system is influenced by several parameters, in this case mainly by proportional control valve, oil bulk modulus, oil viscosity, mass load etc. This paper will be focused on experimental measurement and mathematical simulation of dynamics of a hydraulic system with proportional control valve, linear hydraulic cylinder and mass load. The measurement is performed on experimental equipment that enables realization of dynamic processes of the hydraulic system. Linear hydraulic cylinder with mass load is equipped with position sensor of piston. The movement control of piston rod is ensured by the proportional control valve. The equipment enables to test an influence of parameter settings of regulator of the proportional control valve on position and pressure system responses. The piston position is recorded by magnetostrictive sensor that is located in drilled piston rod side of the linear hydraulic cylinder. Pressures are measured by piezoresistive sensors on the piston side and the piston rod side of the hydraulic cylinder. The measurement is performed during movement of the piston rod with mass load to the required position. There is realized and verified a mathematical model using Matlab SimHydraulics software for this hydraulic system.

1 Introduction

Hydraulic systems are applied in various industrial sectors. They are applied mainly at manufacturing machines, transport and handling devices, logging machines, further in energetics, food-processing industry, aeronautical technics etc. The application of these systems increases due to increasing design qualities of single hydraulic elements in recent years. Advantageous drive characteristics, single continuous and adjustable control of parameters, positive ratio power/weight of an actuator and also a possibility of development into machine construction belong to general properties of hydraulic systems. It is not possible to replace these systems by other known types of mechanisms in the area of high-power amplifications. There are gradually increased requirements for technical performance, accuracy, complexity and control speed of hydraulic systems control. Combining hydraulics, electronics and computer technique are created much more accurate mechanisms that fulfill increasing requirements and thus affect the quality of production technology and increase the labour productivity.

It is possible to simulate dynamic behaviour of hydraulic elements and complete hydraulic systems due to increasingly more powerful computer technique and more sophisticated simulation programs. It is possible to simulate different operating conditions of a hydraulic system for different initial conditions and different element adjustment by means of a mathematical model, which represents a real hydraulic system. It is a big advantage of the mathematical simulation of hydraulic systems. Thus, we can identify design flaw or deficiency before the actual realization of a given system, but also to solve problems on the already operated equipment. It is necessary to experimentally verify the mathematical simulation because a simplification is an accompanying phenomenon of modelling. The fact that every mathematical model is always burdened with an error, does not diminish the importance of modelling and its results.

2 Control of hydraulic system

There is possible to control e.g. movement direction, speed, force and position of linear hydraulic cylinders in hydraulic systems. This paper is focused on position control of linear hydraulic cylinder by means of proportional control valve and control card. This card is used to comparison of the input desired quantity (i.e. the position for cylinder extension) with the specific position in which the cylinder is located at a given moment. The difference between the desired and the actual regulated quantities enters in the control card. The steering signal of the proportional control valve is created on basis of this difference. In this case it is control of spool position of the

[a] Corresponding author: martin.vasina@vsb.cz

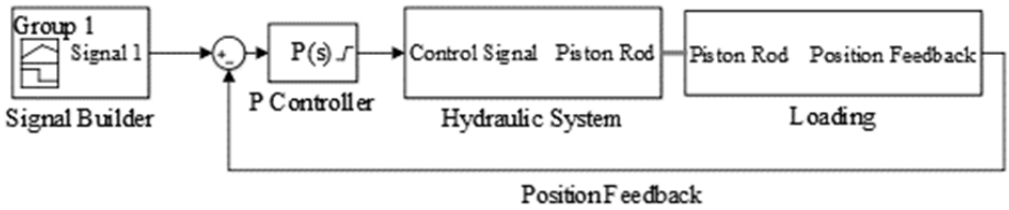

Figure 1. Schematic diagram of regulated system

proportional control valve. The control card PID00A-400 (Parker) was used in this case. The abbreviation PID indicates individual control components (i.e. proportional, integrative and derivative). Only the proportional control component was used to the regulation. This component is defined by the parameter *P*, which creates an output signal for the proportional control valve PV. The signal is proportional to the difference between the desired quantity and the controlled quantity. Parameter P represents the value of proportional gain of the controller.

Figure 1 shows the schematic diagram of the regulated system. A jump signal of the desired quantity (i.e. extension of piston road to the desired position) is adjusted by means of the Signal Builder block. The P Controller block represents the control card. The Hydraulic System block demonstrates the hydraulic system and the Loading block represents external load on the piston rod of the cylinder HC and the position measuring of the piston too.

3 Description of experimental equipment

The experimental hydraulic system was built on test stand from Parker company (see figure 2). The assembled hydraulic system allows control of the position of the hydraulic cylinder HC with mass load *m* in connection with position feedback. Movement control is realized by the proportional control valve PV and the PID00A-400 control card. The position feedback is ensured using the position sensor PoS.

The schematic diagram of the hydraulic system is shown in figure 3. The hydraulic pump HP is used as a source of pressure energy. Mineral oil of the VG46 type with the temperature t_t = 50 °C was used as the working liquid. The linear hydraulic cylinder HC is controlled by means of the proportional control valve PV. Control of the proportional control valve PV is realized by means of the PID00A-400 control card. The desired position of the hydraulic cylinder HC is generated using Matlab Simulink software by means of the AD612 card (Humusoft). The desired position comes up to the control card, where it is compared to the actual position of piston that is measured by the position sensor PoS. The mass load *m* is hanged on the piston rod of the hydraulic cylinder HC. That is connected to the proportional control valve PV by means of the hoses H-A and H-B. The proportional control valve PV is connected to the hydraulic pump HP by means of the hose H-P and to the tank T by the hose H-T. The hydraulic aggregate also consists of the check valve CV, the relief valve RV, the filter F and the cooler C. The measurement was performed as follows: The constant value of the pressure p = 8 MPa is adjusted at input of the proportional control valve PV. Furthermore, the control card receives a signal in the form of the desired position x = 0.15 m generated using Matlab Simulink software. The proportional control valve PV connects the channel P with the channel A and the channel T with the channel B at the same time. Hydraulic oil flows through the hydraulic hose H-A into the piston chamber of the hydraulic cylinder HC and the mass load *m* moves down. The extension speed of the piston rod of the hydraulic cylinder HC depends on the oil flow *Q* and on the size of the adjusted proportional component *P* of the control card. When the piston rod is approaching the desired position, there is a throttling and extension deceleration until its stop in the desired position. There are measured the pressure p_A on the piston side and the pressure p_B on the piston rod side by means of the pressure sensors PS A and PS B during this process. There were used the PR15 Hydrotechnik sensors (ranging from 0 to 40 MPa) with the measurement accuracy of 0.5% in this case. The piston rod position was measured by the Balluff BTL7 sensor (PoS) that is integrated in the body of the hydraulic cylinder HC. The signal from the sensors is recorded by means of the M5050 Hydrotechnik measuring equipment. Measured data are processed using Hydrowin software and subsequently compared with a mathematical model using MS Excel software [1-4].

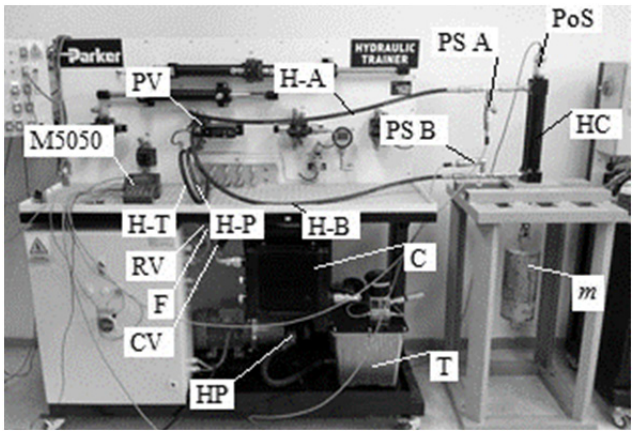

Figure 2. Experimental hydraulic system

Parameters of equipment:

- Hydraulic oil – density ρ = 870 kg m^{-3}, kinematic viscosity $\nu = 3.81 \cdot 10^{-5}$ m^2 s^{-1}.
- Hose H-A, H-B – length l = 2 m, outside diameter D = 0.018 m, inside diameter d = 0.01 m.
- Hose H-P, H-T – length l = 1.2 m, outside diameter D = 0.018 m, inside diameter d = 0.01 m.

[a] Corresponding author: martin.vasina@vsb.cz

- Hydraulic cylinder HC – piston stroke l = 0.3 m, piston diameter D = 0.04 m, piston rod diameter d = 0.028 m, mass load m = 50 kg.

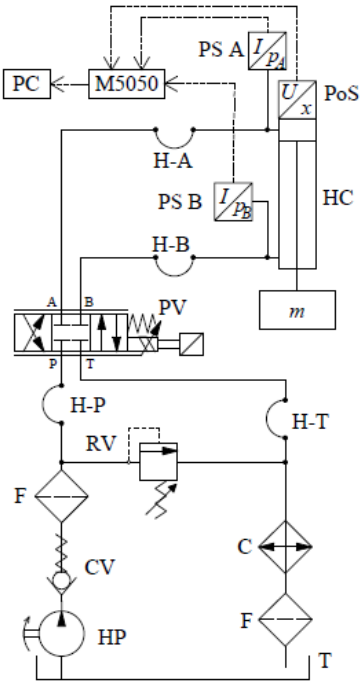

Figure 3. Schematic diagram of hydraulic system

The measured time dependencies of the piston position x for different values of the control component P are shown in figure 4. Furthermore, there is noticed the desired piston position in the form of the step change at the time t = 1 s to the position x = 150 mm. It is evident that the hydraulic cylinder HC reaches the desired position more quickly with the increasing value of the parameter P. The permanent control deviation is the smallest at the highest referred amplification. The proportional component P on the control card is in the range from 0 to 1000. In terms of clarity, only the selected values of the parameter P are shown in figure 4. The time dependencies of the position x in the range of the parameter P from 500 to 1000 were similar as in the case of the parameter value P = 500. For this reason these dependencies aren´t shown in figure 4.

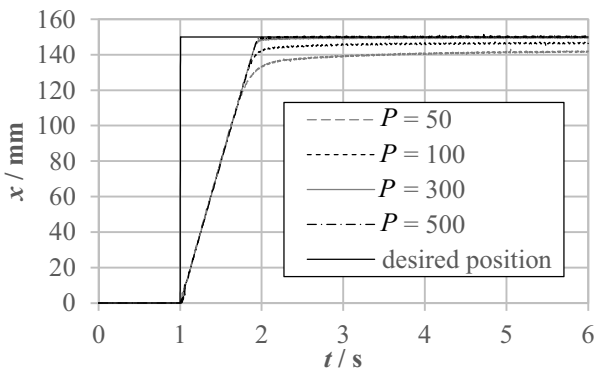

Figure 4. Measured time dependencies of the piston position x for different values of the parameter P

4 Description of measurement of Δp–Q characteristic of proportional control valve

It is necessary to know a flow characteristic depending on the pressure gradient through the proportional control valve PV for the accurate setting of the mathematical model of the proportional control valve PV. Therefore the hydraulic circuit (see figure 5) was assembled on the test stand in order to measure this characteristic. The schematic diagram of the hydraulic system for measurement of the Δp-Q characteristic of the proportional control valve PV is shown in figure 6. The measurement was performed as follows: The proportional control valve PV is gradually opened via the voltage signal from Simulink in the range of 0 to 10 V in steps of 1 V. The throttle valve TV is gradually closed until complete break of the flow Q for each opening of the valve PV. The pressure difference $\Delta p = p_A - p_B$ is measured for individual flows Q. The flow is measured by the flowmeter FM. The pressures are measured by means of the pressure sensors PS A and PS B. The resulting Δp-Q characteristic of the proportional control valve PV is shown in figure 7 [4].

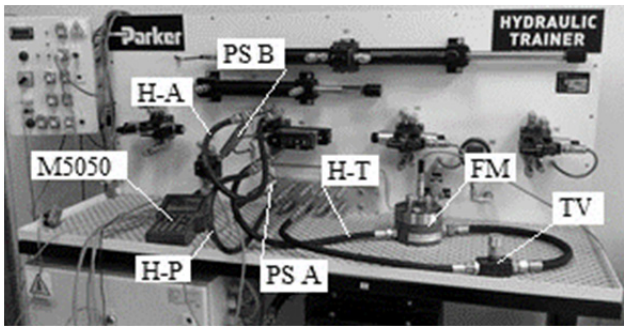

Figure 5. Experimental hydraulic system for measurement of the Δp-Q characteristic of the proportional control valve PV

It is evident (see figure 7) that hydraulic oil flows through the proportional control valve only from the voltage of 2 V. It can be caused by the positive overlap of the spool of the proportional control valve PV. It is also visible that the flow Q at a given pressure gradient Δp is increasing with increases of the voltage, which corresponds to the valve opening (i.e. to its flow area).

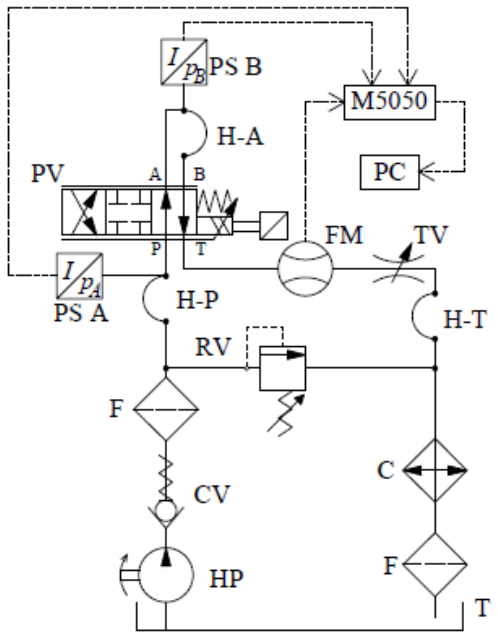

Figure 6. Schematic diagram of hydraulic system for measurement of the Δp-Q characteristic of the proportional control valve PV

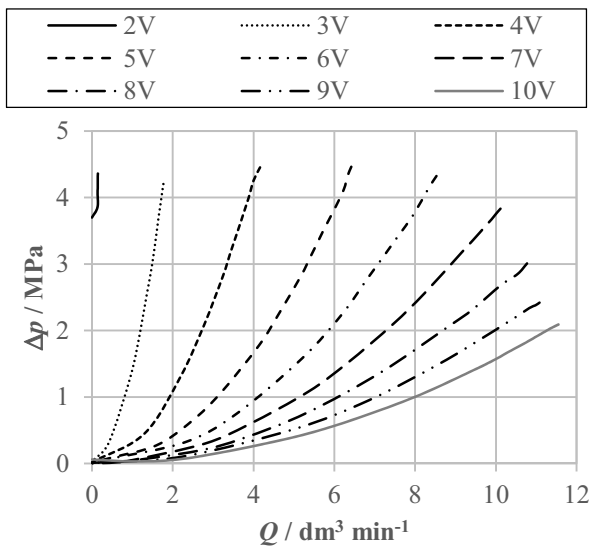

Figure 7. Measured Δp-Q characteristic of the proportional control valve PV

5 Description of mathematical model of experimental equipment

The mathematical model was created using Matlab SimHydraulics software (see figures 1, 8 and 9). This program allows solving the mathematical model based on the physical principle. The subsystems Hydraulic System (see figure 8) and Loading (see figure 9) were created in the model (see figure 1) for better clarity. The subsystem Hydraulic System represents the hydraulic system. The hydraulic pump HP is a source of oil pressure. The system pressure is limited by the relief valve RV to the value $p = 8$ MPa. Oil flows through the check valve CV, the hose H-P, the proportional control valve PV and the hose H-A to the piston side of the hydraulic cylinder HC. For this reason the mass load m moves down. Hydraulic oil flows from the piston rod space through the hose H-B, the proportional control valve PV and the hose H-T to the tank T. Furthermore, the model consists of the block Control Signal for control of the proportional control valve, the block Pressure Measuring for pressure measurement and the block Solver Configuration. The time step (i.e. $\Delta t = 0.005$ s) for scanning of the investigated quantities was adjusted similarly as in the case of the experimental measurement. The oil parameters are adjusted by the block Oil. The undissolved air content (in this case 1%) was defined in this model [5]. The block Fixed Orifice was used to adjust the resistance that was caused by elements on the real equipment, i.e. by the cooler C and the filter F. The subsystem Loading (see figure 9) represents the force and the inertia of the mass load m. Furthermore, the position measuring of the piston by means of the block PoS is located in this subsystem. The position feedback (Position Feedback) is generated from this block and is compared with the desired position before the control card P Controller (see figure 1) [2, 3, 6, 7].

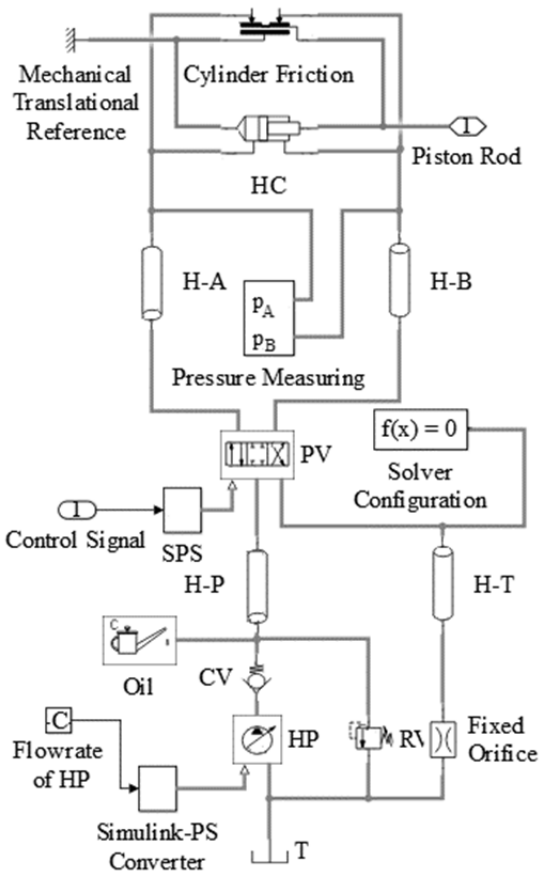

Figure 8. Schematic diagram of the subsystem Hydraulic System

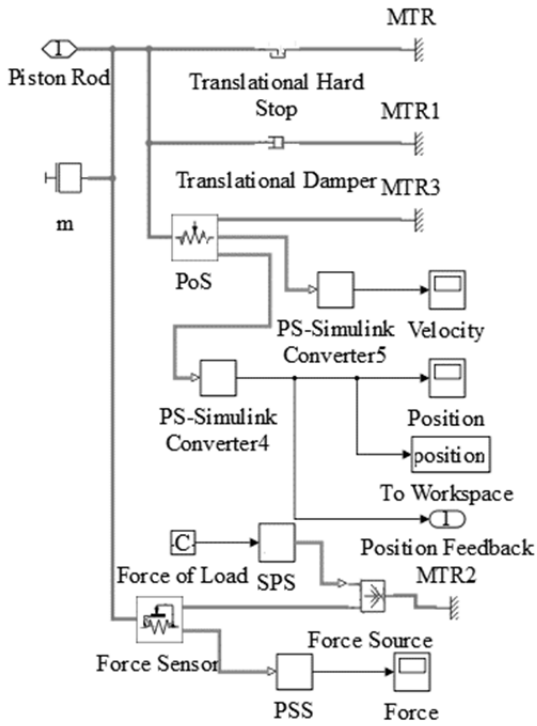

Figure 9. Schematic diagram of the subsystem Loading

6 Comparison of results of experimental measurement and mathematical model

The mathematical simulation was firstly performed for the optimum adjustment of the regulator P = 500. This adjustment corresponds to the quickest achieving of the desired piston position x with the minimum regulatory deviation without an overshoot of the desired position. The comparison of the simulated and the measured time dependencies of the pressures p_A and p_B and the position x is shown in figure 10. It is evident that the simulated and the measured time dependencies of the position x have a good agreement. Similarly the simulated and the measured time dependencies of the pressures p_A and p_B are consistent too. Their dependence is slightly different only when stopping the hydraulic cylinder HC in the desired position x. It can be caused by an unspecified hydraulic capacity in the hydraulic lines.

The simulations were also performed for further parameters, i.e. for P = 50, P = 100 and P = 300 (see figure 11). It is evident that the simulated dependencies of the position x for the individual parameters P correspond to the measured position dependencies. Similarly, the simulated dependencies of the pressures p_A and p_B for the individual parameters P correspond to the experiment and are not shown for clarity in this figure. The detail of the simulated and the measured dependencies of the piston position x during its arrival to the desired position x = 150 mm is shown in figure 12.

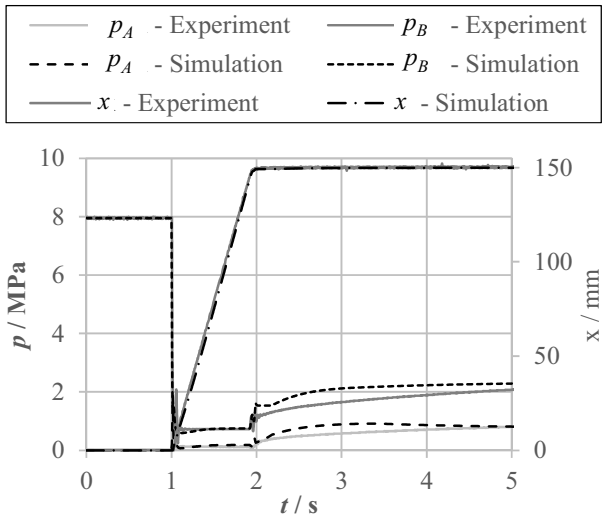

Figure 10. Comparison of measured and simulated time dependencies of pressures and position (proportional component of control P = 500)

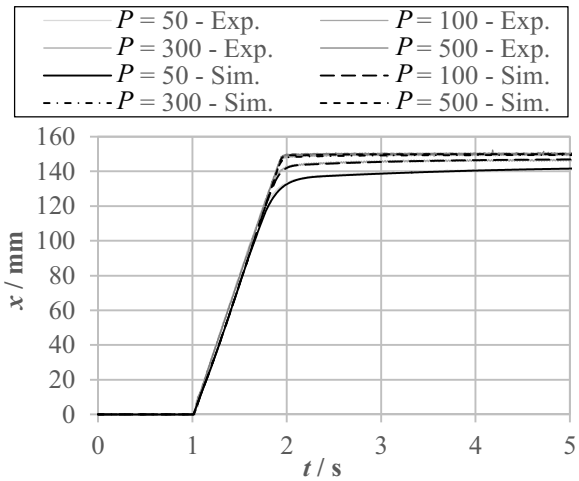

Figure 11. Comparison of measured and simulated time dependencies of the piston position x for different values of proportional component of control P

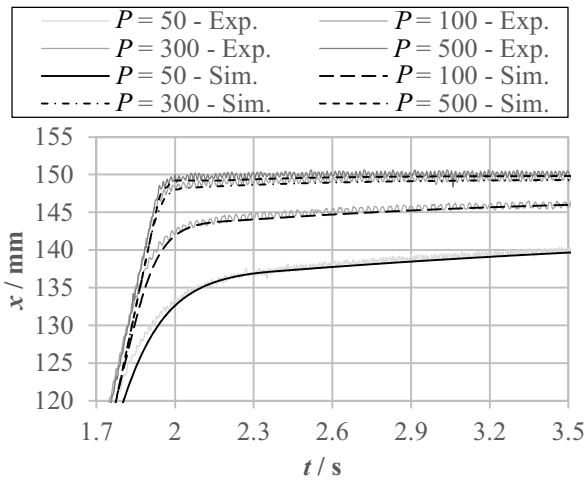

Figure 12. Detail of comparison of measured and simulated time dependencies of the piston position x during its arrival to the desired position

It was verified in the mathematical model that an overshoot of the desired position occurs when the parameter $P = 1100$. It was not possible to experimentally verify this fact because the applied control card has only the range $P = 0 \div 1000$.

7 Conclusions

This paper describes the experimental equipment with proportional control valve, linear hydraulic cylinder and mass load. This equipment allows control of the position with the feedback from the piston position. The Δp-Q characteristic of the proportional control valve for definition of its mathematical model was also measured. The mathematical model of the experimental equipment was created using Matlab SimHydraulics software. This model was verified by comparison of simulated and experimentally measured time dependencies of the piston position. The model was subsequently verified by comparison of simulated and experimentally measured time dependencies of pressures on both sides of the hydraulic cylinder. It was simulated the influence of the parameter of the proportional component P of the control card on time dependence of the piston position. The simulated time dependencies of the piston position for different parameters P correspond to the measured time dependencies of the piston position. It was found in the mathematical model that an overshoot of the desired position occurs when the parameter $P = 1100$. It is possible to debug the controller setting on PC due to the assembled mathematical model. This setting can be subsequently applied in real operation.

References

1. H. Dörr, R. Ewald, J. Hutter, D. Kretz, F. Liedhegener, A. Schmitt, *The Hydraulic Trainer Volume* 2 – Proportional and Servo Valve Technology (Mannesmann Rexroth GmbH, Lohr am Main, 1986)
2. A. Bureček, L. Hružík, *Simulation of Hydraulic Circuit with Linear Hydraulic Motor with Mass Load and Dynamic Characteristics*, J. of Appl. S. in the Term. and Fl. Mech. **5**, 6 (2011)
3. A. Bureček, L. Hružík, M. Vašina, EPJ Web of Conferences, EFM12, *Simulation of Dynamics of System with Hydraulic Lines and Linear Hydraulic Motor with Mass Load*, **45**, 01017, (2013)
4. Parker Hannifin Corporation, Communication Software ProPxD Software for Digital Valve Electronics
5. J. Jablonská, EPJ Web of Conferences, EFM13, *Compressibility of the fluid*, **67**, 02048, (2014)
6. P. Beater, *Entwurf Hydraulischer Maschinen: Modellbildung, Stabilitätsanalyse und Simulation Hydrostatischer Antriebe und Steuerungen* (Springer, Berlin, 1999)
7. The MathWorks, Matlab Simulink User´s Guide, SimHydraulics User´s Guide (USA, 2007)

Acknowledgements

The work presented in this paper was supported by a grant SGS "Investigation of dynamics of fluid systems" SP2015/95.